FIRST ANGLE PROJECTION (ALL DIMENSIONS IN MILLIMETRES)

DRAWING No. 2-80-655-15987

CAUTION THE INFORMATION ON THIS DOCUMENT IS THE PROPERTY OF BHARAT HEAVY ELECTRICALS LTD. IT MUST NOT BE USED DIRECTLY OR INDIRECTLY IN ANY WAY DETRIMENTAL TO THE INTEREST OF THE COMPANY.

05-228/C

01 9. 0 INDICATES WELD AT SHOP.

01 10. ⊗ INDICATES WELD AT SITE.

02 11. HANDLE FOR MANHOLE DOOR(BLIND FLANGE) SHALL BE WELDED AT SITE.

NOTES: ALL DIMENSIONS ARE IN MILLIMETRES

1. DESIGN PRESSURE – 0.2 KG/CM2 (G) DESIGN TEMPERATURE: 480°C
2. FOR STANDARD NOTES OF PRODUCTION AND ERECTION OF PIPES AND TOLERANCE ON FITTINGS REFER DRG NO. 4-80-001-37654 & 4-80-301-26192
3. FOLLOW APPLICABLE QP AND PAINTING SCHEDULE FOR THE PROJECT
4. ALL UNMARKED BENDS/ELBOWS ARE 90 DEG
5. PIPE ENDS SHALL BE BEVELLED AS PER B16.25 FIG.4
6. GASKET IS SUPPLIED VIDE 7419-80-733 PGMA.
7. FOR ELECTRODE DATA REFER

| PIPE SIZE | MATERIAL SPEC | EP FIG | WELD SPEC | ELECTRODE DATA ROOT RUN | ELECTRODE DATA FILLER RUN |
|---|---|---|---|---|---|
| OD1820x8 | ASTM A 387 GR.11 CL.2 | FIG-A | 8 V | ER70S-B2L/ ER80S-B2 | ER70S-B2L/ ER80S-B2/E7016 -B2L/E7018-B2L |
| OD610X6 OD406.4X6 OD60.3X5.54 | ASTM A 387 GR.11 CL.2 /SA335P11 | FIG-A | 6 V | | |

8. THREADS SHALL BE UNIFIED(UNC FOR UPTO 1" DIA) AS PER ASME B1.1 WITH CLASS 2A FIT FOR STUDS AND CLASS 2B FIT FOR NUTS.

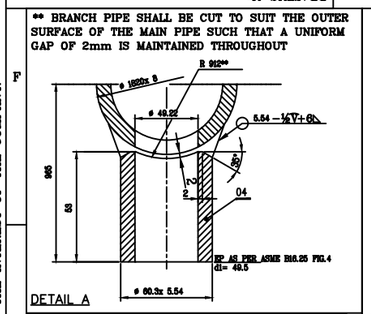


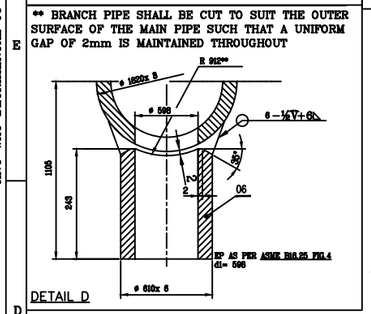


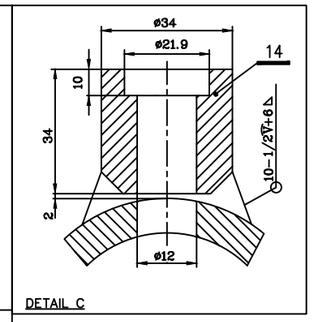


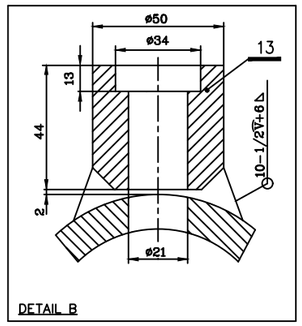


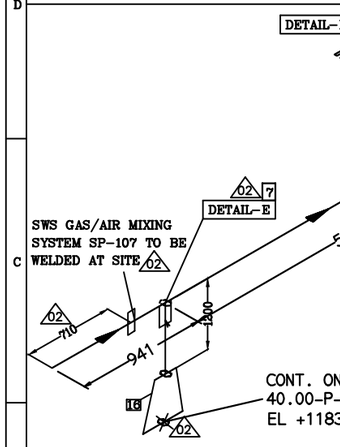


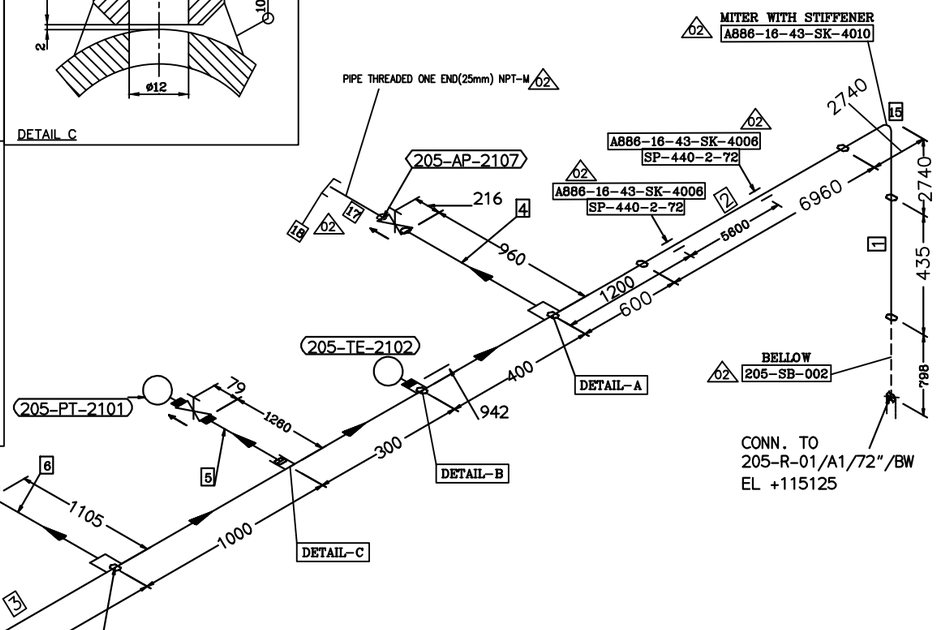


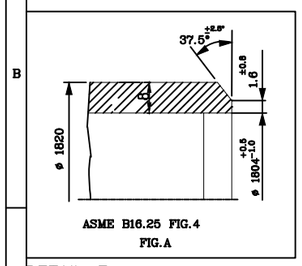


DETAIL-F

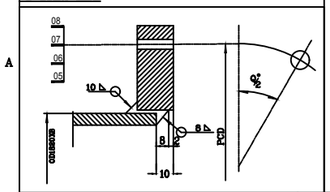

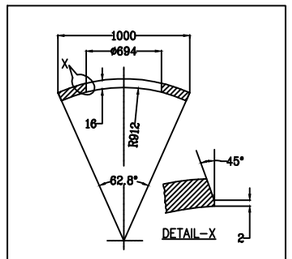


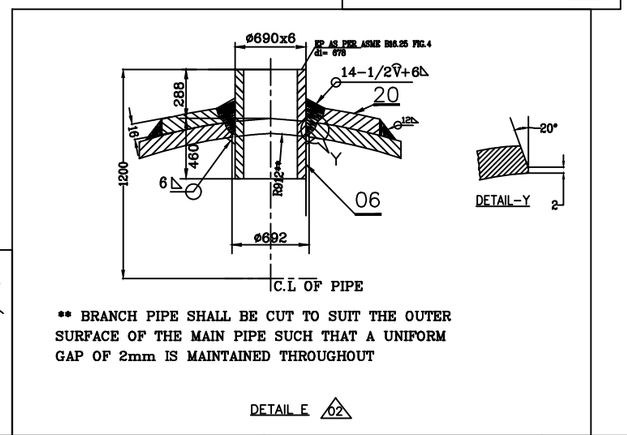


| ITEM CODE | ITEM NO. | DESCRIPTION | DRAWING NO. | ITEM NO. / VAR | MATERIAL CODE / MATERIAL SPEC. | A / C | UNIT WT. / QTY. |
|---|---|---|---|---|---|---|---|
| | 20 | PAD PLATE T=16mm, OD1000/ ID694 | 2-80-655-15987 | | --- / ASTM A 387 GR.11 CL.2 | C | 204\|434 / 1 |
| | 19 | PLUG B16.11 SCRM 3000# 1" | 2-80-655-15987 | | --- / ASTM A 182GrF11 CL2 | C | 0\|430 / 1 |
| WF60282ZL09ZZZZZZ | 18 | CAP B16.11 SCRF 3000# 2" | 2-80-655-15987 | | --- / ASTM A 182GrF11 CL2 | C | 0\|644 / 1 |
| P121917Z00919ZZZZ | 17 | PIPE OD60.3X5.54 L=50 | 2-80-655-15987 | | --- / SA335P11 | C | 0\|370 / 1 |
| | 16 | P.F REDUCER OD1020XOD690 | 4-80-655-83084 | | ---- / ASTM A 387 GR.11 CL.2 | C | 109\|710 / 1 |
| WGMBY41Z0486304ZZ | 15 | P.F MITRE BEND 90DEG OD1820X8 | 2-80-655-16054 | 15 | ---- / ASTM A 387 GR.11 CL.2 | C | 1574\| 681 / 1 |
| WDMBY41Z0486305ZZ | 14 | SW STUB CL.6000 1/2" | 4-80-655-83170 | | ---- / A-182 Gr.F11 Cl.2 | C | \| / 1 |
| WK602D3Z006ZZZZZZ | 13 | SW STUB CL.6000 1" | 4-80-655-83168 | | ---- / A-182 Gr.F11 Cl.2 | C | \| / 1 |
| FBF6321Z048ZZZZZZ | 12 | BLIND FLANGE. CL.150 FF/125AARH 24" | 2-80-655-16055 | 4 | ---- / ASTM A 387 GR.11 CL.2 | C | 43\|985 / 1 |
| GKFDR22Z02402ZZZZ | 11 | GASKET JOB STD EXPANDED PTFE CORD 150# 7MM THK -24" | 2-80-655-15987 | | ---- / ---- | | --\|-- / 1 |
| --- | 10 | NUT 5/8" UNC | 2-80-655-15987 | | ---- / A-194 Gr.4 | | \| / 40 |
| --- | 09 | STUD 5/8" UNC L=113 | 2-80-655-15987 | | ---- / A-193 Gr.B16 | | \| / 20 |
| FNF6321Z048ZZZZZZ | 08 | FLANGE.SO CL.150 FF/125AARH 24" | 2-80-655-16024 | 4 | ---- / ASTM A 387 GR.11 CL.2 | C | 27\|781 / 1 |
| PI8Y613Z04863ZZZZ | 07 | BRANCH PIPE OD406.4X6 L=124 | 2-80-655-15987 | | ---- / SA 335 P11 | C | 7\|346 / 1 |
| PI8Y613Z04863ZZZZ | 06 | P.F BRANCH PIPE OD610X6 L=243 | 3-80-655-35569 | 2 | ---- / ASTM A 387 GR.11 CL.2 | C | 21\|718 / 1 |
| PI8Y613Z04863ZZZZ | 05 | PIPE OD21.3X4.78 L=1260 | 2-80-655-15987 | | ---- / SA 335 P11 | C | 1\|947 / 1 |
| PI8Y613Z04863ZZZZ | 04 | BRANCH PIPE OD60.3X5.54 L=53 | 2-80-655-15987 | | ---- / SA 335 P11 | C | 0\|396 / 1 |
| PI8Y613Z04863ZZZZ | 03 | P.F PIPE OD1820x8 L=8558 02 | 3-80-655-35566 | 11 | ---- / ASTM A 387 GR.11 CL.2 | C | 3059\|240 / 1 |
| PI8Y613Z04863ZZZZ | 02 | P.F PIPE OD1820x8 L=6960 02 | 3-80-655-35566 | 10 | ---- / ASTM A 387 GR.11 CL.2 | C | 2488\|001 / 1 |
| PI8Y613Z04863ZZZZ | 01 | P.F PIPE OD1820x8 L=435 02 | 3-80-655-35566 | 9 | ---- / ASTM A 387 GR.11 CL.2 | C | 155\|500 / 1 |

| REV | DATE | ALTERED / APPROVED | M.P.K / TRINADH |
|---|---|---|---|
| 02 | 03.06.19 | | |
| ZONE | DRAWING REVISED AS PER LATEST EIL DRAWING. REVISION MARKED AS 02 | | |
| 01 | 29.04.19 | | |
| ZONE | DRAWING REVISED AS PER MAIL FROM EIL DT: 24.04.19 REVISION MARKED AS 01 | | |

CUSTOMER: INDIAN OIL CORPORATION LIMITED (HALDIA)

CONSULTANT: ENGINEERS INDIA LIMITED (EIL) NEW DELHI

NAME OF PROJECT: BS-VI, HALDIA

BHEL CUSTOMER NO: 7419

BHARAT HEAVY ELECTRICALS LTD., PIPING CENTRE, CHENNAI 600 017

| | NAME | SIGN | DATE |
|---|---|---|---|
| DRN | M.P.K | -sd- | 16.03.19 |
| CHD | TRINADH | -sd- | 16.03.19 |
| APPD | C.SARAVANAN | -sd- | 16.03.19 |

NO OF ITEMS

DEPT. / CODE: GRADE OF UN TOL. DIM C/M/F | SCALE | WEIGHT (Kg). | ITEM No.

TITLE: EIL DRAWING NO: 72-P-205-2001-K34D-IH-E

CARD CODE: U 01

DRAWING No.: 2-80-655-15987

REV: 02

SIZE A2

V: A2